Tele: 0353-2698101/7238

Air Force School,
Bagdogra – 734421

20W/149/11(A)/ED/1393

25 Nov 22

INVITATION OF QUOTATIONS FOR CONSTRUCTION OF ASSEMBLY SHED WITH DRAINAGE SYSTEM UNDER TWO BID SYSTEM REQUEST FOR PROPOSAL (RFP) NUMBER 20WG/149/11(A)/ED DATED NOV 22

1. Bids in sealed cover are invited for construction of assembly shed with drainage system (20x21x05mtrs). Details are mentioned in Part II of this RFP. Please super scribe the above mentioned Title, RFP number and date of opening of the Bids on the sealed cover to avoid the Bid being declared invalid.

2. The address and the contact numbers for sending Bids or seeking clarifications regarding this RFP are given below:-

(a)	Bids / queries to be addressed to:	Chairman, Air Force School, Bagdogra
(b)	Postal address for sending the Bids	Chairman, Air Force School, Bagdogra Post: Bagdogra Airport Dist: Darjeeling West Bengal-734421
(c)	Details of the contact person	Mr Bikash Saha (PGT-Physics) Mr Rakesh Roy (PGT-Chemistry)
(d)	Tele number of the contact person	97493-18101 & 8617415108 (During School Hours: 0800-1500hrs) 0353-2698093
(e)	E-mail ID of contact person	princiafbgd@rediffmail.com

3. This RFP is divided into following six parts:-

(a) Part I : General information/instruction for the Bidders
(b) Part II : Schedule of requirement, technical specifications, delivery details
(c) Part III : Standard Conditions of RFP, which will form part of the Contract
(d) Part IV : Special Conditions applicable to this RFP
(e) Part V : Evaluation Criteria and Format for Price Bids
(f) Part VI: Performance Bank Guarantee Format

4. Part II, III, IV, V, VI, appendix- 'A' & Terms and Conditions of this RFP are to be returned back by the Bidder after putting rubber stamp of the firm and annotating signatures of authorized representative.

5. This RFP is being issued with no financial commitment and the Buyers reserves the right to change or vary any part thereof at any stage. Buyer also reserves the right to withdraw the RFP, should it become necessary at any stage.

(T Jyohti)
Gp Capt
Executive Director
Air Force School, Bagdogra

PART I – GENERAL INFORMATION

1	Date and time for depositing Bids	The Bids is to be placed in sealed envelope. The sealed envelopes are to be deposited by 1000hrs on **16 Dec 22**.
2	Manner of depositing the Bids	Sealed Bids should be either dropped in the Tender Box marked as **"ASSEMBLY SHED WITH DRAINAGE SYSTEM"** or sent by registered post at the address given above so as to reach by the due date and time. Late tenders will not be considered. No responsibility will be taken for postal delay or non-delivery / non-receipt of Bid documents. Bids sent by FAX or e-mail will not be considered.
3	Time and date for opening of Bids	**16 Dec 22, 1200hrs**. If due to any exigency, the due date for opening the bid is declared a holiday, the Bids will be opened on the next working day at the same time.
4	Location of the Tender Box	Tender box marked as **"ASSEMBLY SHED WITH DRAINAGE SYSTEM"**, at the Arjan Gate of Air Force Station Bagdogra. Only those Bids that are found in the tender box will be opened.
5	Place of opening of the Bids	Air Force School, Bagdogra, Darjeeling (WB). The Bidders may depute their representatives, duly authorized in writing to attend the opening of Bids on the due date and time. Rates and important commercial/technical clauses quoted by all Bidders will be read out in the presence of the representatives of all the Bidders. This event will not be postponed due to non-presence of representatives of the Bidder.
6	Two Bid system	Bids should be in two parts as follows: (a) Technical bid consisting of all technical details along with EMD & commercial terms and conditions. (b) Financial bid must indicating **items-wise price** for the items mentioned in the technical bid and all other commercial terms and conditions. Please quote the rates in figures as well as in words. Rates should be valid up to **31 Mar 23.** The bids will be opened on **16 Dec 22**.
7	Forwarding of Bids	(a) The technical bid and financial bid should be sealed by the bidder in separate covers duly superscribed and both these sealed covers are to be put in a bigger cover which should also be sealed and duly superscribed. The technical bids are to be opened and evaluated in the first instance. At the second stage, financial bids of only the technically acceptable offers should be opened for further evaluation and ranking before awarding the contact. (b) Bids should be forwarded by Bidders under their original memo/letter pad inter alia furnishing details like GST number, Bank address with EFT Account if applicable, etc and complete postal and e mail address of their office in both bids.
8	Clarification regarding contents of the RFP	Clarification on the RFP, if any may be obtained from Mr Bikash Saha (PGT-Physics) & Mr Rakesh Roy (PGT-Chemistry) Air Force School Bagdogra 97493-18101 & 8617415108 & (0353-2698093) working hour only i.e 0800hrs to 1400hrs.
9	Modification and Withdrawal of Bids	A bidder may modify or withdraw his bid after dropping it in the tender box. For this bidder may submit a written request. However, same can be done prior to deadline prescribed for submission of bids. No bid shall be modified after the deadline for submission of Bids and withdrawal will result in Bidder's forfeiture of bid security.
10	Clarification regarding contents of the Bids	During evaluation and comparison of Bids, the buyer may, at its discretion, ask the bidder for the clarification of his bid. The request for the clarification will be given in writing and no change in prices or substance of the bid will be sought, offered or permitted. No post-bid clarification on the initiative of the bidder will be entertained.
11	Rejection of Bids	Canvassing by the Bidder in any form, unsolicited letter and post-tender

		correction may invoke summary rejection with forfeiture of EMD (Earnest Money Deposit). Conditional tenders will be rejected.
12	Unwillingness to quote	Bidders unwillingness to quote should ensure that intimation to this effect reaches before the due date and time of opening of the Bid
13	Validity of Bids	The Bids should remain valid till **31 Mar 23** from the last date of submission of Bids.
14	Earnest Money Deposit (EMD) & validity	Bidders are required to submit Earnest Money Deposit (EMD) for amount of **Rs 94,500/-**along with their technical bid. The bid security should be in the form of Account Payee Demand Draft, Fixed Deposit Receipt, Banker's Cheque or Bank Guarantee from any of the public sector banks or a private sector bank authorized to conduct government business, safeguarding the purchaser's interest in all respects. EMD of the unsuccessful bidders will be returned to them at the earliest after expiry of the final bid validity and latest on or before the 30th Day after the award of the contract. The Bid Security of the successful bidder would be returned, without any interest whatsoever, after the receipt of Performance Security from them as called for in the contract.
15	Validity of the Bid Security	The bid security should remain valid for a period of forty five days beyond the final bid validity period.
16.	Exemption from submission of Bid Security	Bid security is not required to submit by those firms who are registered with the Central Purchasing Organization, National Small Industries Corporation (NSIC) or concerned Departments or Ministries of the Government of India. Ministry of Micro, Small and Medium Enterprises (MSME) certificate.

(T Jyothi)
Gp Capt
Executive Director
Air Force School, Bagdogra

PART II – ESSENTIAL DETAILS OF SERVICES REQUIRED

Schedule of Requirement - Air Force School Bagdogra requires construction of assembly shed with drainage system to be of high quality & standard. The details of the construction of assembly shed with drainage system is attached at Appx - A.

Note:-

1. The construction of the said work undertaken should be of as per SOR attached and all the materials will be approved by inspection officer prior to progressing the work.

2. **Completion Period -** Completion period of construction work would be 45 **days** from the effective date of contract. Please note that contract can be cancelled unilaterally by the Buyer in case non-completion of work within stipulated time. Extension of completion period will be at the sole discretion of the Buyer, with applicability of LD clause.

3. **Terms of construction** **Construction of assembly shed with drainage system are to be done as per correct specifications. On any deviation, contract will be rejected and the same to be reconstructed by due date failing which the security deposit will be forfeited.**

(T Jyothi)
Gp Capt
Executive Director
Air Force School, Bagdogra

"Certified that terms & conditions mentioned above have been fully understood and are fully acceptable"

Signature and stamp of Bidder accepting the above terms & conditions

PART III – STANDARDCONDITIONS OF RFP

The Bidder is required to give confirmation of their acceptance of the Standard Conditions of the Request for Proposal mentioned below which will automatically be considered as part of the Contract concluded with the successful Bidder (i.e Firm in the Contract) as selected by the Buyer. Failure to do so may result in rejection of the Bid submitted by the Bidder.

1. **Law:** The Contract shall be considered and made in accordance with the laws of the Republic of India. The contract shall be governed by and interpreted in accordance with the laws of the Republic of India.

2. **Effective Date of the Contract:** The contract shall come into effect on the date of signatures of both the parties on the contract (Effective Date) and shall remain valid until the completion of the obligations of the parties under the contract. The completion period of work shall commence from the effective date of the contract.

3. **Arbitration:** All disputes or differences arising out of or in connection with the contract shall be settled by bilateral discussions. Any disputes, disagreement or question arising out of or relating to the Contract or relating to construction or performance, which cannot be settled amicably, may be resolved through arbitration. The standard clause of arbitration is as per Form DPM-7, DPM-8 and DPM-9 (Available in MoD website and can be provided on request).

4. **Penalty for use of Undue influence:** The firm undertakes that he has not given, offered or promised to give, directly or indirectly, any gift, consideration, reward, commission, fees, brokerage or inducement to any person in service of the Buyer or otherwise in procuring the Contracts or for bearing to do for having done or forborne to do any act in relation to the obtaining or execution of the present Contract or any other Contract with the Government of India for showing or forbearing to show favour or disfavour to any person in relation to the present Contract or any other Contract with the Government of India. Any breach of the aforesaid undertaking by the firm or any one employed by him or acting on his behalf (whether with or without the knowledge of the commission of any offers by the firm or anyone employed by him or acting on his behalf, as defined in Chapter IX of the Indian Penal Code 1860 or the Prevention of Corruption Act 1986 or any other Act enacted for the prevention of corruption shall entitle the Buyer to cancel the contract and all or any other contracts with the Firm and recover from the Firm the amount of any loss arising from such cancellation. A decision of the Buyer or his nominee to the effect that a breach of the undertaking had been committed shall be final and binding on the Firm. Giving or offering of any gift, bribe or inducement or any attempted at any such act on behalf of the Firm towards any officer/employee of the Buyer or to any other person in a position to influence any officer/employee of the Buyer for showing any favour in relation to this or any other contract, shall render the Firm to such liability / penalty as the Buyer may deem proper, including but not limited to termination of the contract, imposition of penal damages, forfeiture of the Bank Guarantee and refund of the amounts paid by the Buyers.

(T Jyothi)
Gp Capt
Executive Director
Air Force School, Bagdogra

5. **Agent / Agency Commission:** The firm confirms and declares to the Buyer that the firm is the original manufacturer of the stores/ provider of the services referred to in this Contract and has not engaged any individual or firm. Whether Indian or foreign whatsoever, to intercede, facilitate or in any way to recommend to the Government of India or any of its functionaries whether officially or unofficially, to the award of the contract to the Firm, nor has any amount been paid, promised or intended to be paid to any such individual or firm in respect of any such intercession, facilitation or recommendation. The Firm agrees that if it is established at any time to the satisfaction of the Buyer that the present declaration is in any way incorrect or if at a later stage it is discovered by the Buyer that the Firm has engaged any such individual / firm, and paid or intended to pay any amount, gift, reward, fees, commission or consideration to such person party, firm or institution, whether before or after the signing of this contract, the firm will be liable to refund that amount to the Buyer. The firm will also be debarred from entering into any supply Contract with the Government of India for a minimum period of five years. The Buyer will also have a right to consider cancellation of the Contract either wholly or in part, without any entitlement or compensation to the Firm who shall in such an event be liable to refund all payments made by the Buyer in terms of the Contract along with interest at the rate of 2% per annum above LIBOR rate. The Buyer will also have the right to recover any such contract concluded earlier with the Government of India.

6. **Access to Books of Accounts:** In case it is found to the satisfaction of the Buyer that the Firm has engaged an Agent or paid commission or influenced any person to obtain the contract as described in clauses relating to Agents/Agency Commission and penalty for use of undue influence, the firm, on a specific request of the Buyer, shall provide necessary information/inspection of the relevant financial documents/information.

7. **Non-disclosure of Contract document:** Except with the written consent of the Buyer/firm other party shall not disclose the contract or any provision, specification, plan, design, sample or information thereof to any third party.

8. **Liquidated Damages:** Delay in submission of PBG / Bank Guarantee and delay in construction period i.e 45 days. The BUYER may also deduct from firm as agreed, liquidated damages to the sum of 0.5% of the contract price of the delayed incompletion of work per week.

9. **Termination of Contract:** The Buyer shall have the right to terminate this Contract in part or in full in any of the followings cases:-

(a) The completion of work is delayed for causes not attributable to Force Majeure for more than 03 months after the scheduled date of completion of given in SOR.

(b) The firm is declared bankrupt insolvent.

(T Jyothi)
Gp Capt
Executive Director
Air Force School, Bagdogra

(c) The completion of work is delayed due to causes of Force Majeure by more than 03 months provided Force Majeure clause is included in contract.

(d) The Buyer has noticed that the firm has utilized the services of any Indian/Foreign agent in getting this contract and paid any commission to such individual / company etc.

(e) As per decision of the Arbitration Tribunal.

10. **Notices:** Any notice required or permitted by the contract shall be written in the English language and may be delivered personally or may be sent by FAX or registered per-paid mail/airmail, addressed to the last known address of the party whom it is sent.

11. **Transfer and Sub-letting:** The firm has no right to give, bargain, sell assign or sublet or otherwise dispose of the Contract or any part thereof, as well as to give or to let a third party take benefit or advantage of the present Contract or any part thereof.

12. **Amendments:** No provision of present Contract shall be changed or modified in any way (including this provision) either in whole or in part except by an instrument in writing made after the date of this Contract and signed on behalf of both the parties and which expressly states to amend the present Contract.

13. **Taxes and Duties (GST):** As per norms laid down by Govt of India and amended from time to time. In the absence of any such stipulation in the bid, it will be presumed that the prices quoted by the Bidder are inclusive of GST and as such no liability of GST will be developed upon by the Buyer.

(T Jyothi)
Gp Capt
Executive Director
Air Force School, Bagdogra

"Certified that terms & conditions mentioned above have been fully understood and are fully acceptable"

Signature and stamp of Bidder Accepting the above terms & conditions

PART IV – SPECIAL CONDITIONS OF RFP

Important:- *The Bidders is required to give confirmation of their acceptance of the Special Conditions of the Request for Proposal mentioned below which will automatically be considered as part of the Contract concluded with the successful Bidder (i.e Firm in the Contract) as selected by the Buyer. Failure to do so may result in rejection of the Bid submitted by the Bidder.*

1. **Performance Guarantee:** The Bidder will be required to furnish a Performance Guarantee by way of Bank Guarantee through a public sector bank or a private sector bank authorized to conduct government business (ICIC Bank Ltd, Axis Bank Ltd or HDFC Bank Ltd.) for a sum equal to 10% of the contract value with 30 days of receipt of the confirmed order. Performance Bank Guarantee should be valid up to 60 days beyond the date of warranty. The specimen of PBG is attached.

2. **Payment terms:** No advance payments shall be made. 100% payment shall be made within 30 days of satisfactory completion of work.

3. **Paying Authority:** Chairman, Air Force School, Bagdogra – 734014

4. **Risk & Expense clause:** Executive Director, Air Force School, Bagdogra reserves the right to acquire stores at the expense of contractor from any source in case the contract fails to deliver items as projected in the above schedule at the place and time specified. The debit of expenses towards such incidents will be deducted from the security deposit, which shall be reimbursed by the contractor or at the contractor's expense to be paid by him. Decision of Executive Director of Air Force School, Bagdogra to resort to this practice for an emergency / contingency will be final and binding.

5. **Force Majeure clause**

   a. Neither party shall bear responsibility for the complete or partial nonperformance of any of its obligations (except for failure to pay any sum which has become due on account of receipt of goods under the provisions of the present contract), if the non-performance results from such Force Majeure circumstances as Flood, Fire, Earth Quake and other acts of God as well as War, Military operation, blockade, Acts or Actions of State Authorities or any other circumstances beyond the parties control that have arisen after the conclusion of the present contract.

   b. In such circumstances the time stipulated for the performance of an obligation under the present contract is extended correspondingly for the period of time of action of these circumstances and their consequences.

   c. The party for which it becomes impossible to meet obligations under this contract due to Force Majeure conditions, is to notify in written form the other party of the beginning and cessation of the above circumstances immediately, but in any case not later than 10 (Ten) days from the moment of their beginning.

(T Jyothi)
Gp Capt
Executive Director
Air Force School, Bagdogra

d. Certificate of a Chamber of Commerce (Commerce and Industry) or other competent authority or organization of the respective country shall be a sufficient proof of commencement and cessation of the above circumstances.

e. If the impossibility of complete or partial performance of an obligation lasts for more than 03 months, either party here to reserves the right to terminate the contract totally or partially upon giving prior written notice of 30 (thirty) days to the other party of the intention to terminate without any liability other than reimbursement on the terms provided in the agreement for work.

6. **Inspection Authority:** Inspection authority will be Air Officer Commanding, Air Force Station, Bagdogra or his representative.

7. **Warranty clause:** Warranty on maintenance work to be provided atleast for ..... months from the date of acceptance of the same by the School and in case of any defect arising during this period, the contractor will rectify the same within 07 days of the defect being reported by the School. Delay in rectification will result in extension of the warranty period for the number of delayed days.

(T Jyothi)
Gp Capt
Executive Director
Air Force School, Bagdogra

"Certified that terms & conditions mentioned above have been fully understood and are fully acceptable"

Signature and stamp of Bidder accepting the above terms & conditions

PART V – EVALUATION CRITERIA & PRICE BID ISSUES

1. **Evaluation Criteria** - The broad guidelines for evaluation of Bids will be as follows:

a. Only those Bids will be evaluated which are found to be fulfilling all the eligibility and qualifying requirements of the RFP, both technically and commercially.

b. In respect of Two-Bid system, the technical Bids forwarded by the Bidders will be evaluated by the Buyer with reference to the technical specification as mentioned in the SOR of RFP. The compliance of Technical Bids would be determined on the basis of the parameters specified in the RFP. The Price Bids of only those Bidders will be opened whose Technical Bids would clear the technical evaluation.

c. The Lowest Bid will be decided upon the lowest price quoted by the particular Bidder as per the Price Format given at Para 2 below.

2. **Price Bid Format:** Rates are to be quoted in Indian Rupees (legibly both in figures and words). Rates are to be written in figure against each line, while rates in words are to be written in the last row. The price Bid format is given below and Bidders are required to fill this up correctly with full details:-

Sl No.	Items	Size	Unit price in (Rs)	Total Price (Rs)	GST %	Total Amount (Rs)
(1)	(2)	(3)	(4)	(5)	(6)	(7)
1	Construction of assembly shed with drainage system. Please indicate item wise price (as per Appx- 'A')	21mtrs x 20mtrs x 5mtrs				

(T Jyothi)
Gp Capt
Executive Director
Air Force School, Bagdogra

"Certified that terms & conditions mentioned above have been fully understood and are fully acceptable"

Signature and stamp of Bidder accepting the above terms & conditions

PART VI – PERFORMANCE OF BANK GUARANTEE FORMAT

Form DPM-15

Performance Bank Guarantee Format

From:
Bank _____
To,
The President of India
Ministry of Defence,
Government of India
New Delhi

Dear Sir,

1. Whereas you have entered into a contract No. _____ dated _____ (hereinafter referred to as the said Contract) with M/s _____, hereinafter referred to as the "firm" for supply of goods as per Part-II of the said contract to the said firm and whereas the firm has undertaken to produce a bank guarantee **10% of total Contract value** amounting to _____ to secure its obligations to the President of India. We the _____ bank hereby expressly, irrevocably and unreservedly undertake and guarantee as principal obligors on behalf of the firm that, in the event that the President of India declares to us that the goods have not been supplied according to the Contractual obligations under the aforementioned contract, we will pay you, on demand and without demur, all and any sum up to a maximum of _____ Rupees _____only. Your written demand shall be conclusive evidence to us that such repayment is due under the terms of the said contract. We undertake to effect payment upon receipt of such written demand.

2. We shall not be discharged or released from this undertaking and guarantee by any arrangements, variations made between you and the firm, indulgence to the firm by you, or by any alterations in the obligations of the firm or by any forbearance whether as to payment, time performance or otherwise.

3. In no case shall the amount of this guarantee be increased.

4. This guarantee shall remain valid for _____ months from the date of JRI acceptance of test consignment in India or until all the store, spares and documentation have been supplied according to the contractual obligations under the said contract.

5. Unless a demand or claim under this guarantee is made on us in writing or on before the aforesaid expiry date as provided in the above referred contract or unless this guarantee is extended by us, all your rights under this guarantee shall be forfeited and we shall be discharged from the liabilities hereunder.

6. This guarantee shall be a continuing guarantee and shall not be discharged by and change in the constitution of the Bank or in the constitution of M/s _____.

AIR FORCE SCHOOL BAGDOGRA
TERMS AND CONDITIONS

1. The following terms and conditions needs to be followed for smooth conduct of project:

(a) Construction of assembly shed with drainage system is to be done as per correct specifications. On any deviation, contract will be rejected and the same to be reconstructed by due date failing which the security deposit will be forfeited.

(b) No advance payments shall be made. 100% payment shall be made within 30 days after completion of work at Air Force School, Bagdogra.

(c) Delay in completion of work will attract LD clause which will be at a maximum of 10% of the amount.

(d) Bidders are required to submit Earnest Money Deposit (EMD) for amount of **Rs 94,500/-** along with their technical bid. The bid security should be in the form of Account Payee Demand Draft, Fixed Deposit Receipt, Banker's Cheque or Bank Guarantee from any of the public sector banks or a private sector bank authorized to conduct government business, safeguarding the purchaser's interest in all respects. EMD of the unsuccessful bidders will be returned to them at the earliest after expiry of the final bid validity and latest on or before the 30th Day after the award of the contract. The Bid Security of the successful bidder would be returned, without any interest whatsoever, after the receipt of Performance Security from them as called for in the contract. The bid security should remain valid for a period of forty five days beyond the final bid validity period.

(e) Bid security is not required to submit by those firms who are registered with the Central Purchasing Organization, National Small Industries Corporation (NSIC) or concerned Departments or Ministries of the Government of India. Ministry of Micro, Small and Medium Enterprises (MSME) certificate.

(f) The Bidder will be required to furnish a Performance Guarantee by way of Bank Guarantee through a public sector bank or a private sector bank authorized to conduct government business (ICIC Bank Ltd, Axis Bank Ltd or HDFC Bank Ltd.) for a sum equal to 10% of the contract value with 30 days of receipt of the confirmed order. Performance Bank Guarantee should be valid up to 60 days beyond the date of warranty. The specimen of PBG is attached.

(g) **Bidders who have previously undertaken similar works will be considered eligible to bid for the construction of assembly shed with drainage system. For which, necessary documents/ proof are to be attached with the technical bid.**

(T Jyothi)
Gp Capt
Executive Director
Air Force School, Bagdogra

Appendix- 'A'

AIR FORCE SCHOOL BAGDOGRA
TECHNICAL SPECIFICATION OF ASSEMBLY SHED WITH DRAINAGE SYSTEM

S.No	Items	Sections	Unit Wt Kg/Mtr Kg./SqMtr (minimum)	Length in mtr (minimum)	Width in mtr (minimum)	Weight of Each items in kg (minimum)	Qty per set	Weight per set in kg (minimum)	Total set	Total weight in Kg (minimum)
1	Rafter	SHS 80 x 80 x 4	9.22	11.518	.....	106.196	2	212.392	6	1274.352
2	Bottom Member	SHS 120 x 60 x 5.4	13.76	21.00	.....	288.86	1	288.96	6	1733.760
3	King Post	SHS 25 x 25 x 2.6	1.69	3.500	.....	5.915	1	5.915	6	35.490
4	Tie Member	SHS 96 X 48 X 4.8	9.66	4.893	.....	47.266	2	94.533	6	567.197
5	Vertical Member	SHS 25 x 25 x2.6	1.69	0.746	.....	1.261	2	2.521	6	15.129
6	Vertical Member	SHS 25 X 25 X 2.6	1.69	1.493	.....	2.523	2	5.046	6	30.278
7	Vertical Member	SHS 25 X 25 X 2.6	1.69	2.239	.....	3.784	2	7.568	6	45.407
8	Vertical Member	SHS 25 X 25 X 2.6	1.69	1.756	.....	2.968	2	5.935	6	35.612
9	Vertical Member	SHS 25 X 25 X 2.6	1.69	1.273	.....	2.151	2	4.303	6	25.816
10	Vertical Member	SHS 25 X 25 X 2.6	1.69	0.789	.....	1.333	2	2.667	6	16.001
11	Vertical Member	SHS 25 X 25 X 2.6	1.69	0.306	.....	0.517	2	1.034	6	6.206
12	Diagonal	SHS 38 x	2.75	1.631	.....	4.485	2	8.971	6	53.823

(टी ज्योति/T Jyothi)
ग्रुप कैप्टन/Gp Capt
कार्य निदेशक/Executive Director
वा. से. वि. बागडोगरा/AF School Bagdogra

	Member	38 x 2.6								
13	Diagonal Member	SHS 38 x 38 x 2.6	2.75	2.668	.....	7.337	2	14.674	6	88.044
14	Diagonal Member	SHS 38 x 38 x 2.6	2.75	2.668	.....	7.337	2	14.674	6	88.044
15	Diagonal Member	SHS 38 x 38 x 2.6	2.75	1.929	.....	5.305	2	10.610	6	63.657
16	Diagonal Member	SHS 38 x 38 x 2.6	2.75	1.929	.....	5.305	2	10.610	6	63.657
17	Diagonal Member	SHS 38 x 38 x 2.6	2.75	1.482	.....	4.076	2	8.151	6	48.906
18	Purlin	RHS 96 x 48 x 4	8.22	3.976	.....	32.683	18	588.289	5	2941.445
19	End Purlins	RHS 96 x 48 x 4	8.22	0.600	.....	4.932	18	88.776	2	177.552
20	Rafter Cleat	FlaT 8th x 100	6.28	0.180	.....	1.130	18	20.347	6	122.083
21	Purlin Cleat	FlaT 8th x 101	6.28	0.180	.....	1.130	108	122.083	2	244.166
22	Bottom Runners	SHS 60 x 60 x 4	6.71	3.976	.....	26.679	5	133.395	5	666.974
23	B / Runner Cleat	Flat 8th x 65	4.08	0.180	.....	0.734	25	18.360	2	36.720
24	B / Member Cleat	Flat 8th x 66	4.08	0.180	.....	0.734	5	3.672	6	22.032
25	Base Plate of Truss	Pl. 12th	94.2	0.250	0.250	5.890	2	11.775	6	70.650
26	Base Shoe	SHS 80 x 80 x 4	9.22	0.180	.....	1.660	2	3.319	6	19.915
27	Base stiffner plate	½ Cut Pl. 10th	78.5	0.100	0.080	0.630	2	1.256	6	7.536
28	Gable Frame	SHS 25 x 25 x 2.6	1.69	56.000	.....	94.640	1	94.640	2	189.280

(टी ज्योति/T Jyothi)
ग्रुप कैप्टन/Gp Capt
कार्य निर्देशक/Executive Director
वा. से. वि. बागडोगरा/AF School Bagdogra

29	Gable Post	SHS 25 x 25 x 2.6	1.69	0.250	.....	0.423	54	22.815	2	45.630
30	Seal Plate	Flat 6th x 100	94.2	0.100	0.100	0.940	2	1.884	6	11.304
				STEEL COLUMN						
31	Steel Column	RHS 220 x 140 x 8	41.910	4.000		167.640	1	167.640	12	2011.680
32	Column's Base Plate	Pl. 12 Th	94.200	0.300	0.300	8.480	1	8.478	12	101.736
33	Column's Stiffners	Pl. 10 Th (1/2 Cut)	87.500	0.180	0.100	1.580	4	6.300	12	75.600
34	Column's Top Plate	Pl. 12 Th	94.200	0.250	0.250	5.890	1	5.888	12	70.650
35	Gutter Clamp	Flate 6 Th x 40	3.140	1.150	.....	3.611	43	155.273	2	310.546
36	NutesBoltes& Washers	16 mm Dia	65	.....	.....	.....	08	.....	.....	.....
37	NutesBoltes& Washers	16 mm Dia	50	.....	.....	.....	06	.....	.....	.....
38	Holding down bolt	24 mm Dia x 600 mm Long	.....	.....	.....	.....	04	.....	12	48
39	Gutter	300 x 200 and 3050 Long	.....	.....	.....	.....	08	.....	2	16
40	TATA make, (Blue Scope) galvalume corrugated sheet 0.45 mm thick	.....	.....	6.100	0.900	.....	61	.....	2	132
41	Self Screw	20 x 50	.....	.....	.....	.....	.....	.....	.....	14

(टी ज्योति / T Jyothi)
ग्रुप कैप्टन / Gp Capt
कार्य निर्देशक / Executive Director
वा. से. वि. बगडोगरा / AF School Bagdogra

42	Ridge	450 x 3050	.....	3.050	0.450	.....	.....	.....	.....	09
43	Single Socket PVC Pipe	100 mm	.....	3.050	.....	.....	2	.....	12	24
44	Double Socket PVC Pipe	100 mm	.....	3.050	.....	.....	02	.....	12	24
45	46 Digree Bend	100 mm	.....	.....	.....	.....	03	.....	12	36
46	Clamp	100 mm	.....	.....	.....	.....	08	.....	12	96
47	Screw with Nut	25 x 75	.....	.....	.....	.....	.....	.....	.....	07

FOUNDATION, COLUMN, PLASTER AND SIDE DRAIN

S No.	Description of items	Qty	Unit (minimum)
1	Earth cutting	32.25	Cum
2	Earth Filing		
3	Cement concrete of M 25 Grade with well Graded stone chips of 20mm down normal size containing designed quantity of cement per Cu. M curing the same complete	35.2	Cum
4	Reinforcement for reinforced concrete work in all sorts of structures including distribution bars, stirrups, binders etc. initial straightening and removal of loose rust (if necessary), cutting to requisite length, hooking and bending to correct shape, placing in proper position and binding with 16 gauge black annealed wire at every inter-section.	2.91	MT
	(i) Tor steel / Mild Steel I. SAIL/TATA/RINL		
5	Hire and labour charges for shuttering with centering and necessary staging upto 4m using approved stout props and thick hard wood planks of approved thickness with required bracing for concrete slabs, beams and columns, lintels curved or	213	SQ.M

(टी ज्योति/T Jyothi)
ग्रुप कैप्टन/Gp Capt
कार्य निर्देशक/Executive Director
वा. से. वि. बागडोगरा/AF School Bagdogra

	straight including fitting, fixing and striking out after completion of works		
	(a) 25 mm to 30 mm thick wooden shuttering as per decision & direction of Engineer-In-Charge		
6	Plaster (to wall, floor, ceiling etc.) with sand and cement mortar including rounding off or chamfering corners as directed and raking out joints including trotting, nosing and drip course, scaffolding / staging where necessary (ground floor).	38.395	SQ.M
	(ii) With 4:1 cement mortar		
	(b) 15mm thick plaster		
7	Colour washing with "ELLA" with a cost of white wash priming including cleaning and smoothening surface thoroughly (i) internal (all floors) (b) Two Coats	118	SQ.M
8	Painting with best quality synthetic enamel paint of approved make and brand including smoothening surface by sand papering etc. including using of approved putty etc. on the surface if necessary, (i) Two coats	621	SQ.M
	(b) On steel or other metal surface : with super gloss (hi-gloss) (ii) Two coats		

(T Jyothi)
Gp Capt
Executive Director
AF School Bagdogra

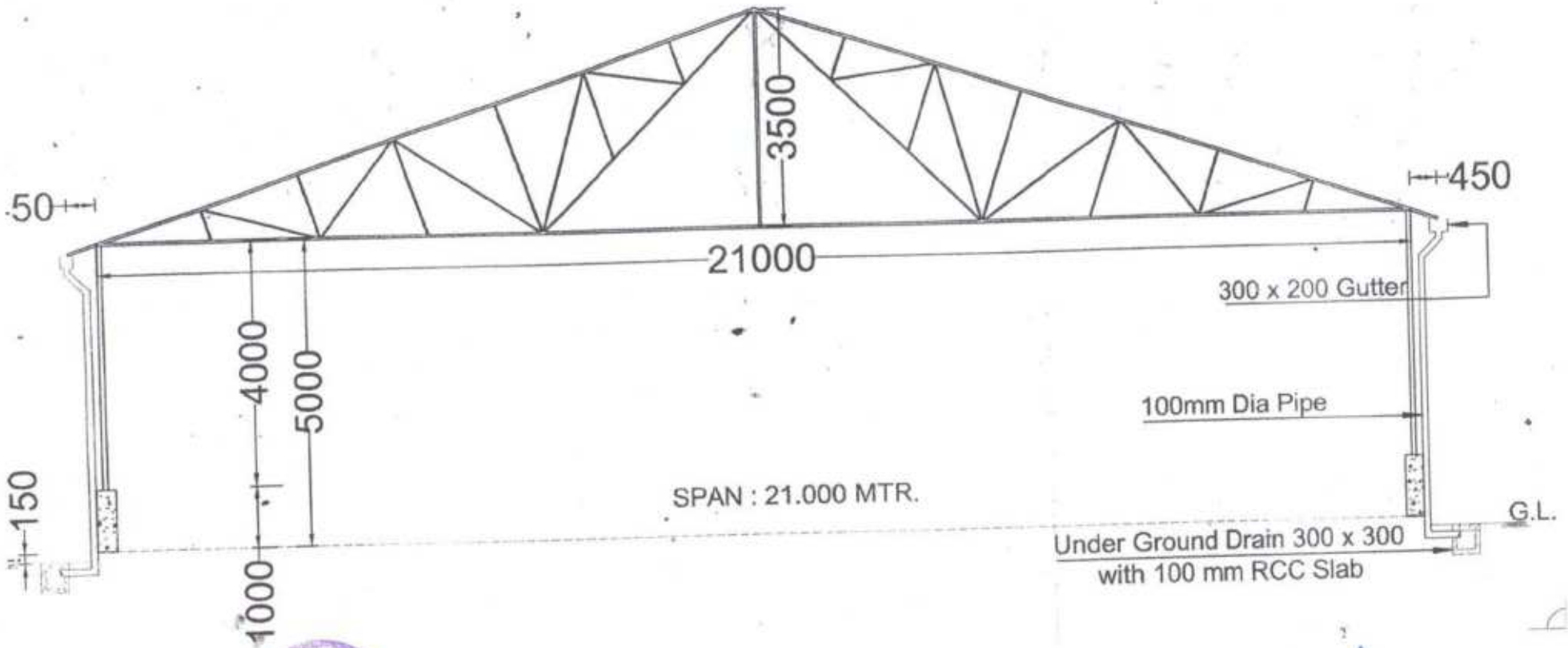

(टी ज्योति / T Jyothi)
ग्रुप कैप्टन / Gp Capt
कार्य निर्देशक / Executive Director
वा. से. वि. बागडोगरा / AF School Bagdogra

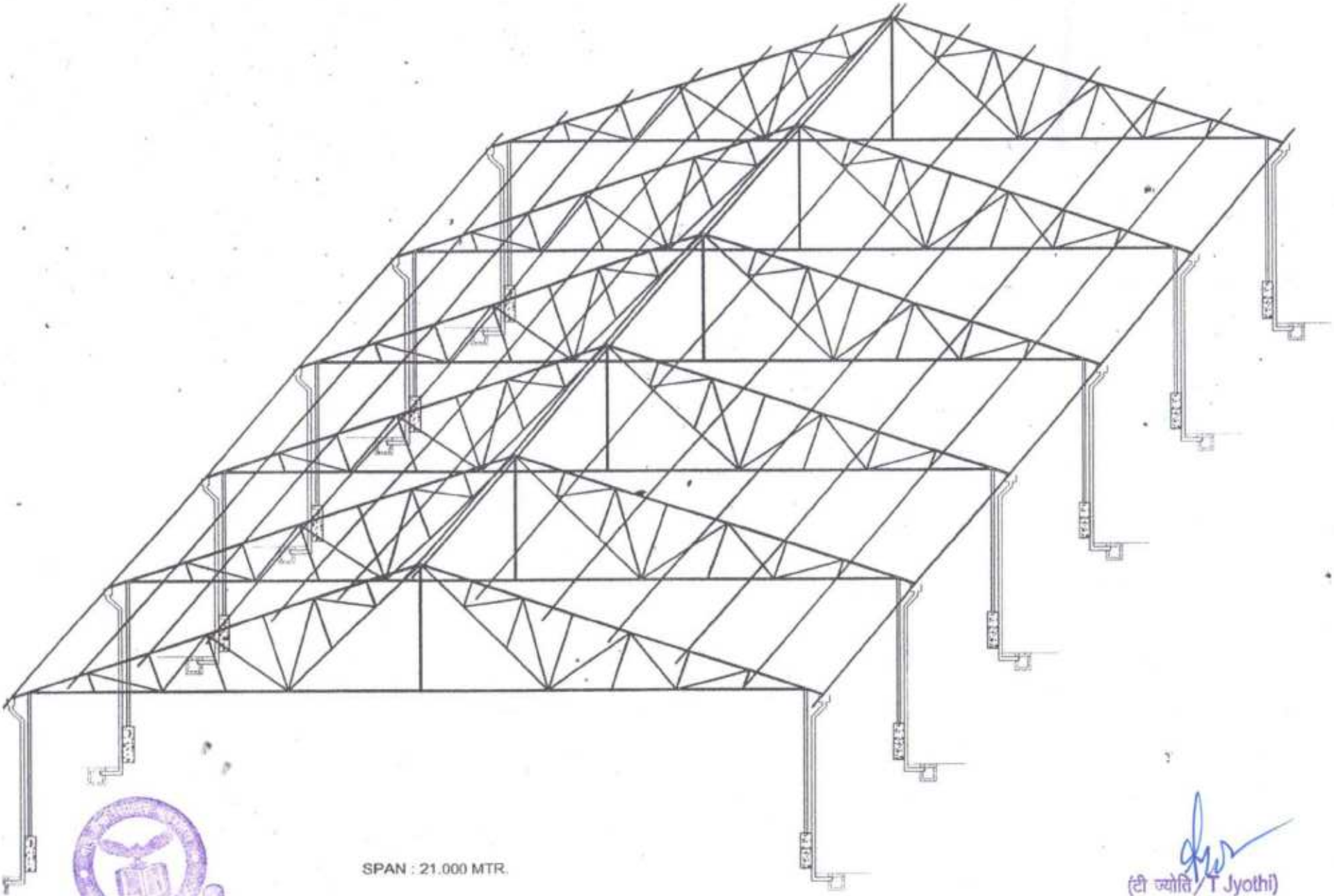

SPAN : 21.000 MTR.

(टी ज्योति / T Jyothi)
ग्रुप कैप्टन / Gp Capt
कार्य निर्देशक / Executive Director
वा. से. वि. बगडोगरा / AF School Bagdogra

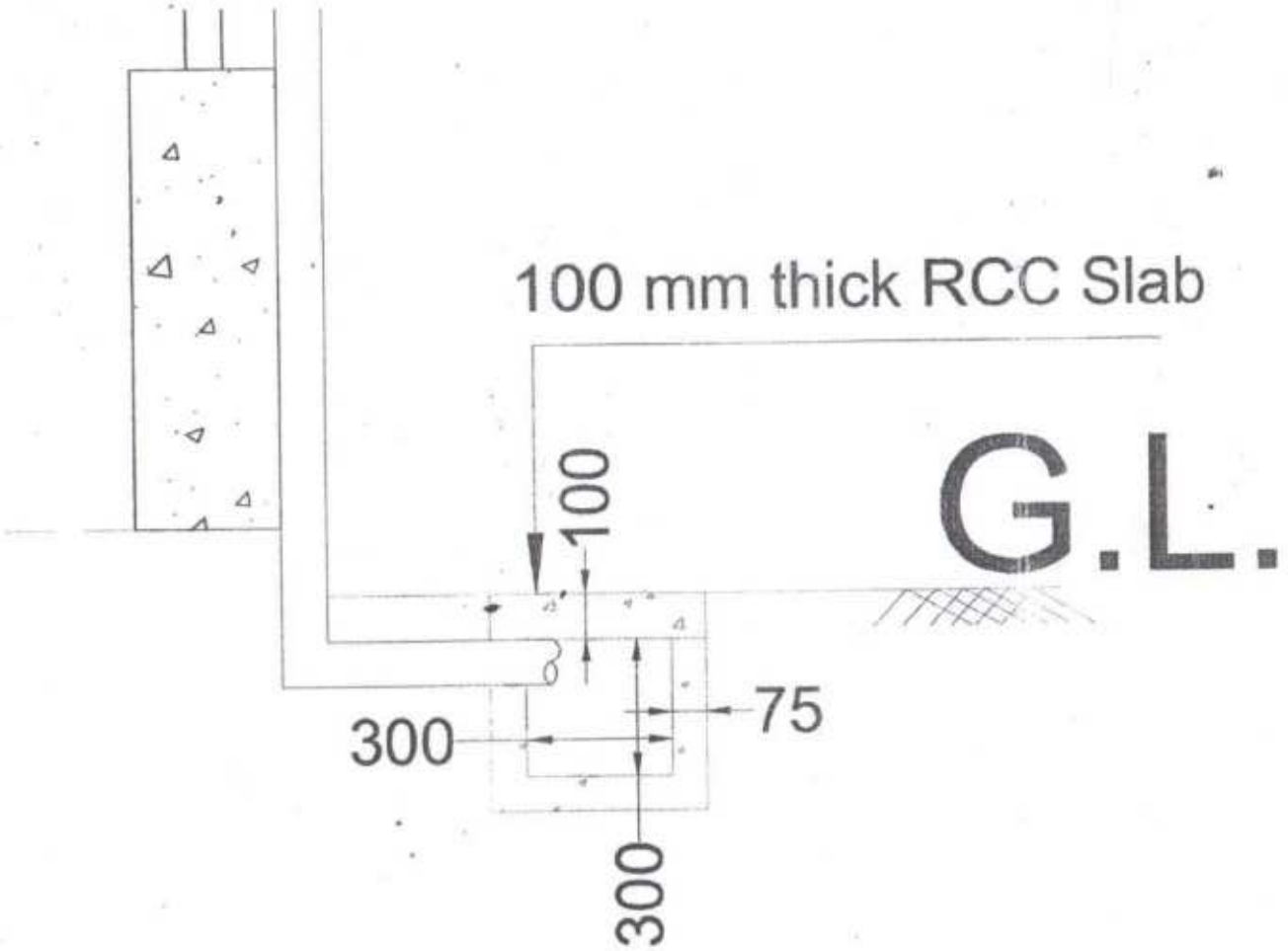

Under Ground Drain 300 x 300
with 100 mm RCC Slab

(टी ज्योति/T Jyothi)
ग्रुप कैप्टन/Gp Capt
कार्य निर्देशक/Executive Director
वा. से. वि. बागडोगरा/AF School Bagdogra

AIR FORCE SCHOOL BAGDOGRA

LAYOUT OF ASSEMBLY SHED

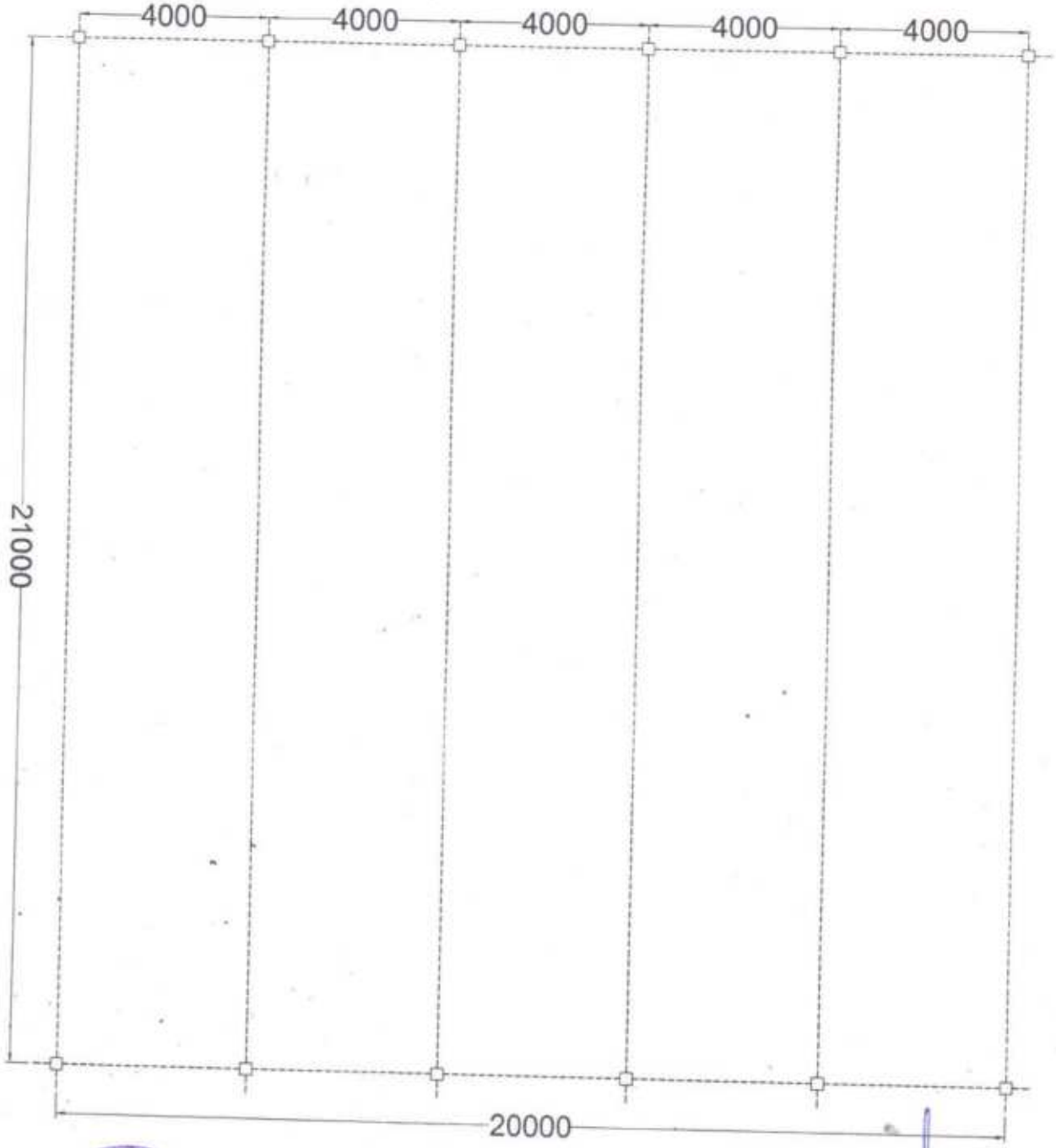

(टी ज्योति / T Jyothi)
ग्रुप कैप्टन / Gp Capt
कार्य निर्देशक / Executive Director
वा. से. वि. बागडोगरा / AF School Bagdogra